ROSH

Reversion	Dispcription	Date	Signed
V0	首次发行	24.11.14	Penglz

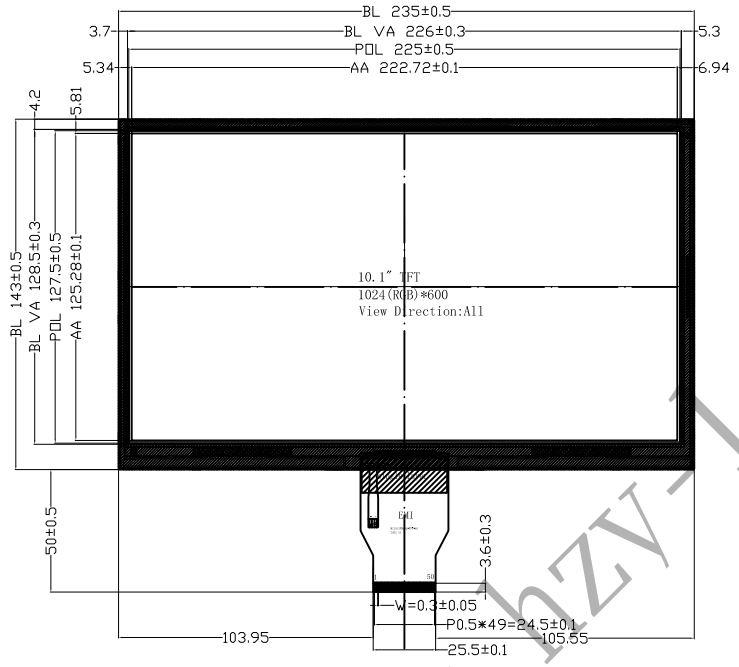

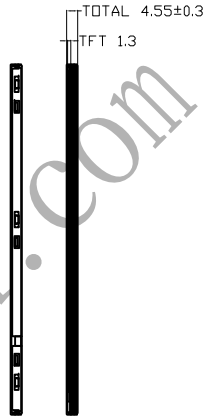

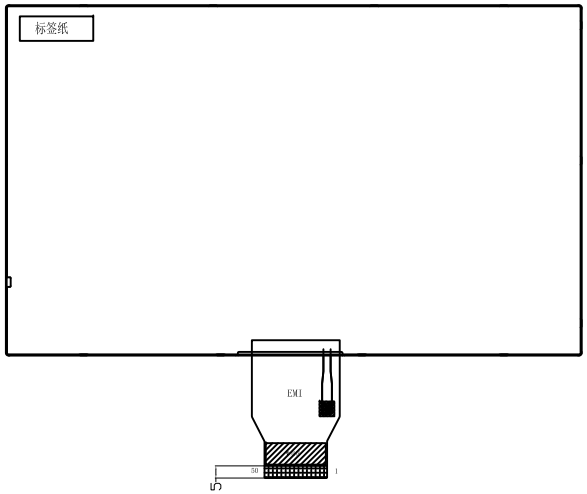

PIN	SYMBOL
1	LED+
2	LED+
3	LED-
4	LED-
5	GND
6	VCOM
7	DVDD
8	MODE
9	DE
10	VSYNC
11	HSYNC
12~19	B7 ~ B0
20~27	G7 ~ G0
28~35	R7 ~ R0
36	GND
37	DCLK
38	GND
39	L/R
40	U/D
41	VGH
42	VGL
43	AVDD
44	RSTB
45	NC
46	VCOM
47	DITHB
48	GND
49	NC
50	NC

50PIN RGB

NOTES:

1. DISPLAY TYPE:10.1" TFT,TRANSMISSIVE Normally Black
2. DRIVER IC:EK79001H+EK73215 or compatible
3. VIEWING DIRECTION: All
4. BACKLIGHT: 42 pcs White LED
5. BRIGHTNESS: -cd/m² (typ)
6. INPUT VOLTAGE: VCC 2.8V(typ)
7. OPERATING TEMP: -20° C~ +70° C
8. STORAGE TEMP: -30° C~ +80° C
9. UNDEFINED DIMENSION TOLERANCE: ±0.2mm
10. RoHS COMPLIABLY

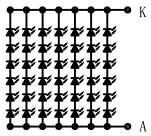

LED 6串7并
Vf=18.6V ; If=140mA

深圳市华之洋光电科技有限公司

SHENZHEN HZY PHOTOELECTRIC TECHNOLOGY CO., LTD

Custumer Ref.	Model No.		Drawing Title	HZ101XPBJ05-A0			

Part No.	Approve		Material	Unmarked Tolerance	Unit	Scale	Page
---	Checked		LCM	±0.2	mm	--	1 of 1
Drawing No.							
---	Draw	Penglz	Date	2024.11.14	Rev 00		

www.hzy-lcd.com