客户确认签字:

REVISIONS				
ZONE	REV	DESCRIPTION	DATE	APPROVED

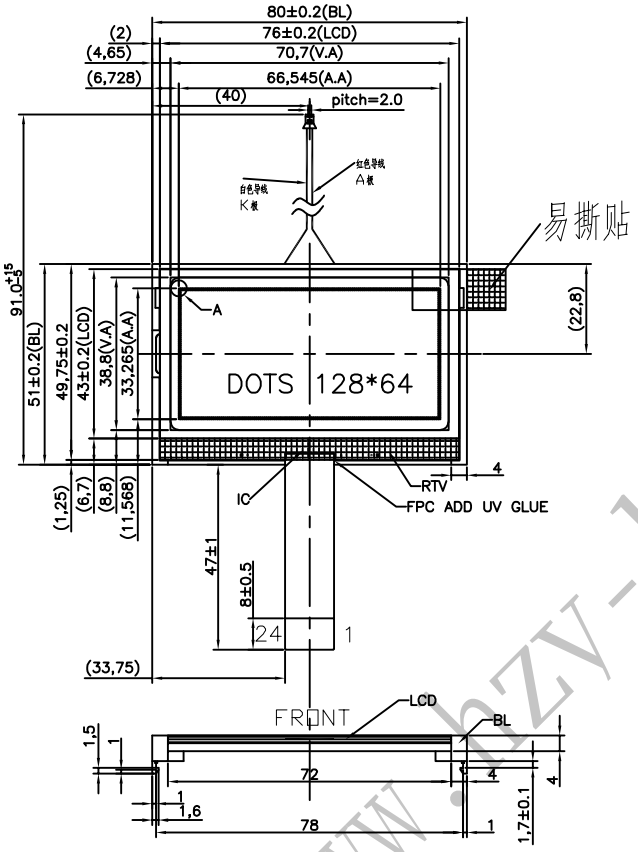

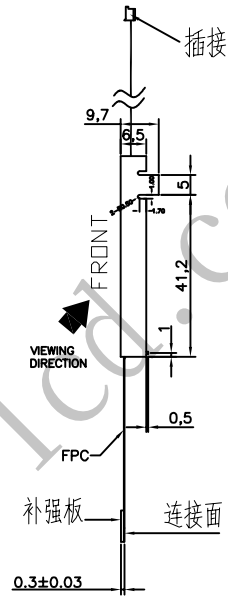

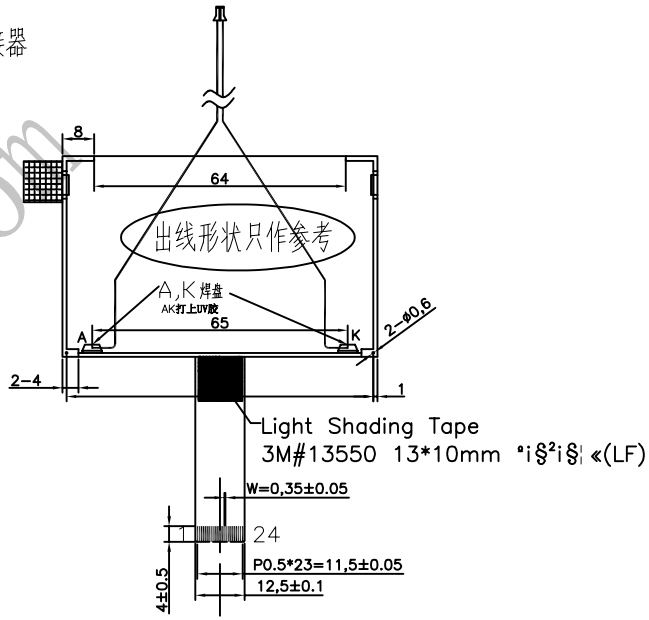

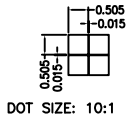

1	NC
2	/CS1
3	/RES
4	A0
5	/WR
6	/RD
7	DB0
8	DB1
9	DB2
10	DB3
11	DB4
12	DB5
13	DB6
14	DB7
15	VDD
16	VSS
17	VSS
18	V0
19	XV0
20	VM
21	VG
22	C86
23	P/S
24	NC

电路图 CIRCUIT DIAGRAM
1*4=4(DIES)
V=5.0V, IF=50~60mA(TYPE)

颜色：白
Color: White

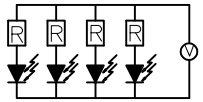

White LED,Vf=3.2V(If=50~60mA)TYPE

The non-specified tolerance of dimension is±0.3mm.

HZY Display CO.,

1. DISPLAY TYPE:	FSTN,Positive	5. DRIVE METHOD:	1/65D,1/9B	DRAWNBY:	Villain	LCM NO: HO12864V-WFH-01	
2. POLARIZER MODE:	TRANSFLECTIVE	6. OPERATING TEMP:	−20°C ~70°C	CHECKEDBY:	Villain		
3. VIEWING DIRECTION:	6 O'clock	7. STORAGE TEMP:	−30°C ~80°C	APPROVED BY:	Villain		UNIT: mm
4. OPERATING VOLTAGE:	VDD 3.0V VOP9.0V(REF)	8. CONNECTOR:	ST7567/COG	DATE:	2018-10-15	CUSTOMER NO:	1 OF 1

www.hzy-lcd.com