客户确认签字：

REVISIONS				
ZONE	REV	DESCRIPTION	DATE	APPROVED

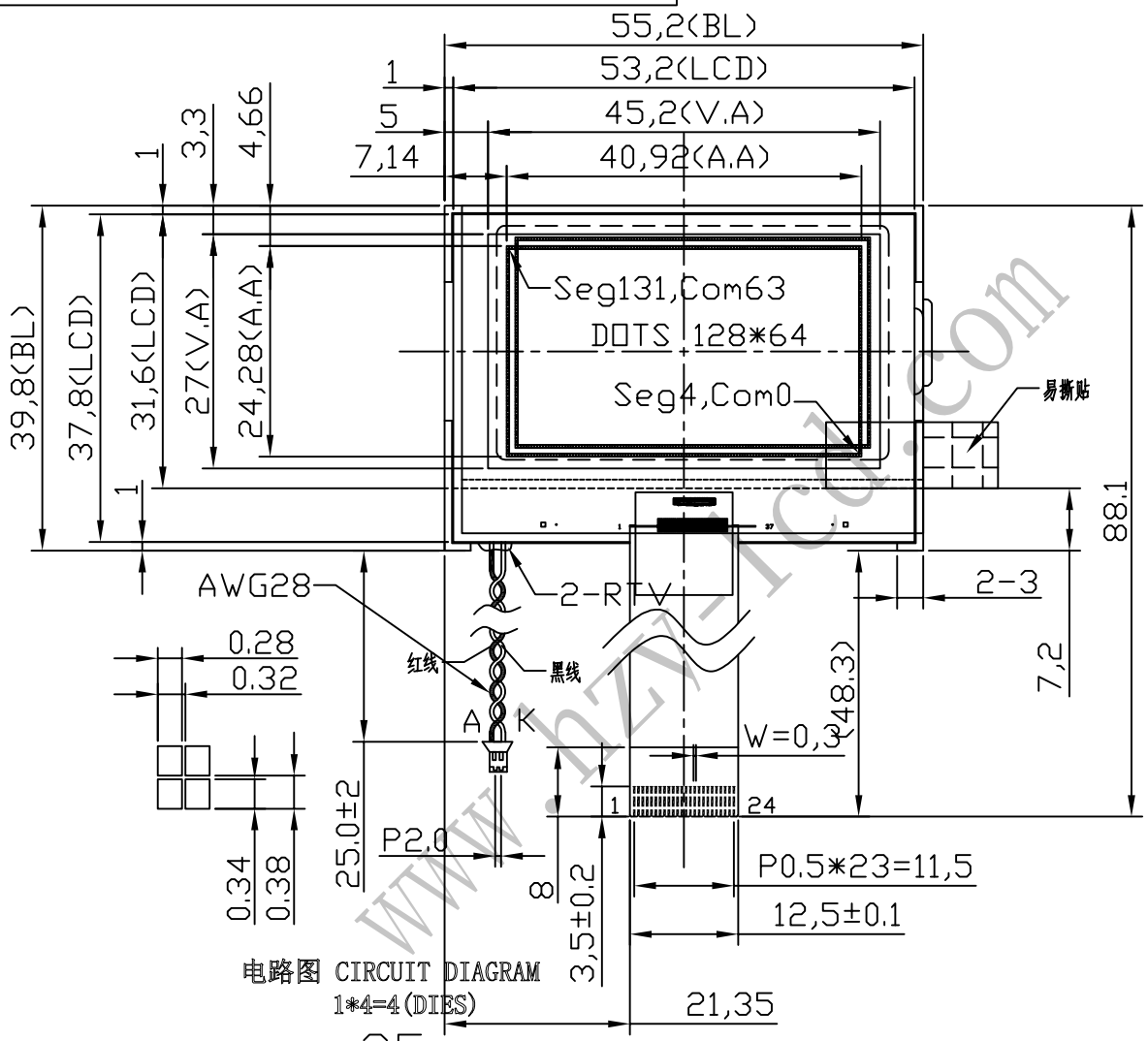

电路图 CIRCUIT DIAGRAM
1*4=4(DIES)

V=5.0V, IF= 35 (TYPE)

颜色：白
Color: White

White LED,Vf=3.2V(If=50~60mA)TYPE

根据样品修正如下：
1、大小片玻璃位置修正为大片在上小片在下；
2、修正背光输入5V 实测电流为35mA；
20181219 XIAHANG

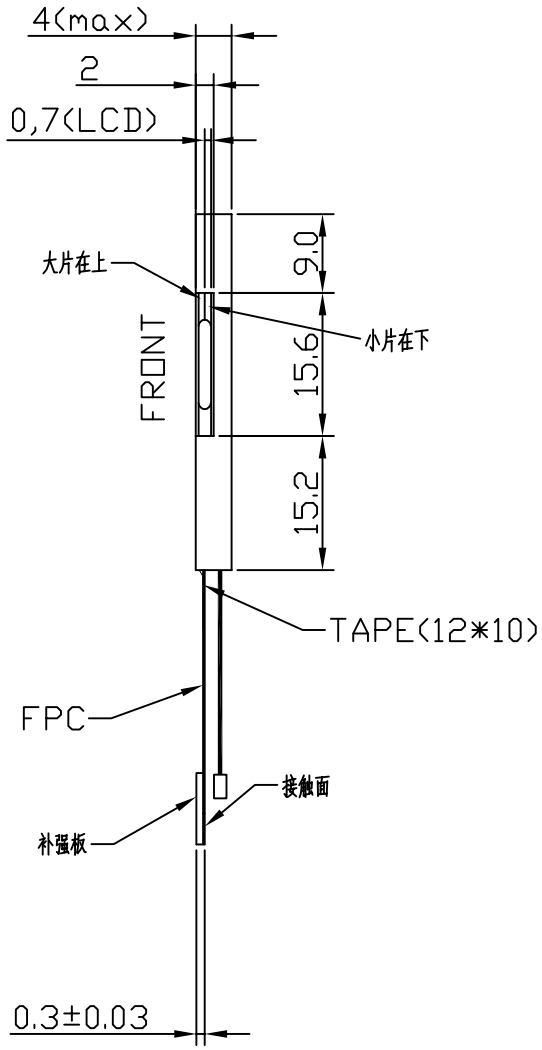

1	NC
2	/CS1
3	/RES
4	A0
5	/WR
6	/RD
7	DB0
8	DB1
9	DB2
10	DB3
11	DB4
12	DB5
13	DB6
14	DB7
15	VDD
16	VSS
17	VSS
18	V0
19	XV0
20	VM
21	VG
22	C86
23	P/S
24	NC

The non-specified tolerance of dimension is±0.3mm.

HZY Display CO.,

1. DISPLAY TYPE:	FSTN,Positive	5. DRIVE METHOD:	1/65D,1/9B	DRAWNBY:	Villain	LCM NO: HO12864U-WFH-00	
2. POLARIZER MODE:	TRANSFLECTIVE	6. OPERATING TEMP:	-20°C ~70°C	CHECKEDBY:	Villain		
3. VIEWING DIRECTION:	6 O'clock	7. STORAGE TEMP:	-30°C ~80°C	APPROVED BY:	Villain		UNIT: mm
4. OPERATING VOLTAGE:	VDD3.0V /VOP 9V	8. CONNECTOR:	ST7567/COG	DATE:	2018-10-20	CUSTOMER NO:	1 OF 1

www.hzy-lcd.com